# Sine encoders

## Blind hollow shaft ø10 to ø14 mm

## 1024...5000 sinewave cycles per turn

## ITD 22 A 4 Y36

ITD 22 A 4 Y36 with blind hollow shaft

### Features

- **Encoder with blind hollow shaft ø10...14 mm**
- **Max. 5000 sinewaves cycles per turn**
- **Sine output signals 1 Vpp**
- **Mounting by torque support**
- **Compact design**
- **Cable output radial**

### Optional

- **Cable with connector**

### Technical data - electrical ratings

| | |
|---|---|
| Voltage supply | 5 VDC ±10 %<br>8...30 VDC |
| Reverse polarity protection | Yes |
| Consumption w/o load | ≤90 mA |
| Sinewave cycles per turn | 1024...5000 |
| Sensing method | Optical |
| Output frequency | ≤180 kHz (-3 dB) |
| Output signals | A, B, 0 |
| Output stage | SinCos 1 Vpp |

### Technical data - mechanical design

| | |
|---|---|
| Size (flange) | ø58 mm |
| Shaft type | ø10 mm (blind hollow shaft)<br>ø12 mm (blind hollow shaft)<br>ø14 mm (blind hollow shaft) |
| Motor shaft tolerance | 0.25 mm axial<br>0.1 mm radial |
| Mounting kit | 006 |
| Protection DIN EN 60529 | IP 65 |
| Operating speed | ≤8000 rpm |
| Starting torque | ≤0.01 Nm (+20 °C) |
| Materials | Housing: aluminium, black, powder-coated<br>Shaft: stainless steel |
| Operating temperature | -20...+85 °C |
| Relative humidity | 90 % non-condensing |
| Resistance | DIN EN 60068-2-6<br>Vibration 10 g, 55-2000 Hz<br>DIN EN 60068-2-27<br>Shock 30 g, 11 ms |
| Connection | Cable 1 m |
| Weight approx. | 280 g |

Subject to modification in technic and design. Errors and omissions excepted.

## ITD 22 A 4 Y36

### Part number

| ITD 22 A 4 Y36 | | | NI | KR1 | S | | IP65 | 006 |
|---|---|---|---|---|---|---|---|---|

**Mounting kit**
006 Mounting accessory kit 006

**Protection**
IP65 IP 65

**Blind hollow shaft**
10 ø10 mm
12 ø12 mm
14 ø14 mm

**Operating temperature**
S -20...+85 °C

**Connection**
KR1 Cable 1 m, radial

**Output signals**
NI A+, A-, B+, B-, N+, N-

**Voltage supply / signals**
M 5 VDC / sine 1 Vpp
S 8...30 VDC / sine 1 Vpp

**Sinewave cycles - see table**

### Sinewave cycles

| 1024 | 2048 | 4572 | 5000 |
|---|---|---|---|

Subject to modification in technic and design. Errors and omissions excepted.

# Sine encoders

## Blind hollow shaft ø10 to ø14 mm

## 1024...5000 sinewave cycles per turn

### ITD 22 A 4 Y36

#### Output signals

Clockwise rotation when looking at the mounting side.

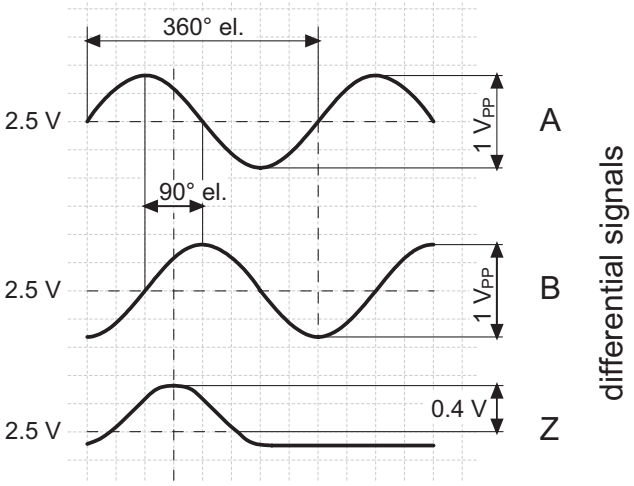


#### Terminal assignment

| Core colour | Assignment |
|---|---|
| brown | Track A + |
| green | Track A – |
| grey | Track B + |
| pink | Track B – |
| red | Track N + |
| black | Track N – |
| brown 0,5 mm² | UB |
| white 0,5 mm² | GND |
| blue | UB-Sense |
| white | GND-Sense |
| transparent | Shield/Housing |

#### Output signal level

| Outputs | Sine |
|---|---|
| Output amplitude A + B | 1 $V_{PP}$ at $Z_0$ = 120 Ω |
| Output amplitude N | approx. 0,4 V (useable part) at $Z_0$ = 120 Ω |

#### Dimensions

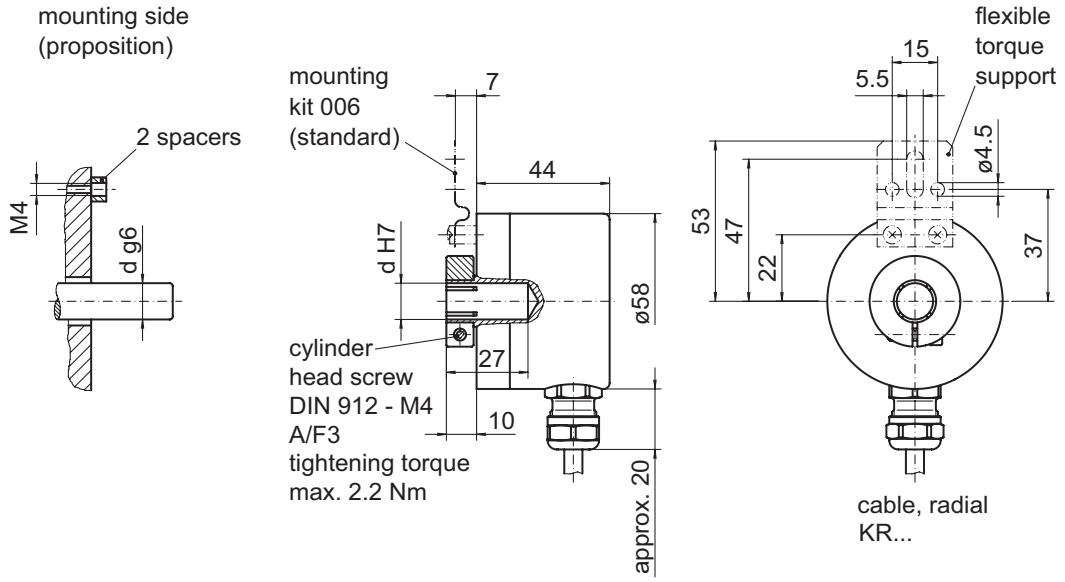


029- 1 Y36




7/10/2013 Subject to modification in technic and design. Errors and omissions excepted.

Subject to modification in technic and design. Errors and omissions excepted.